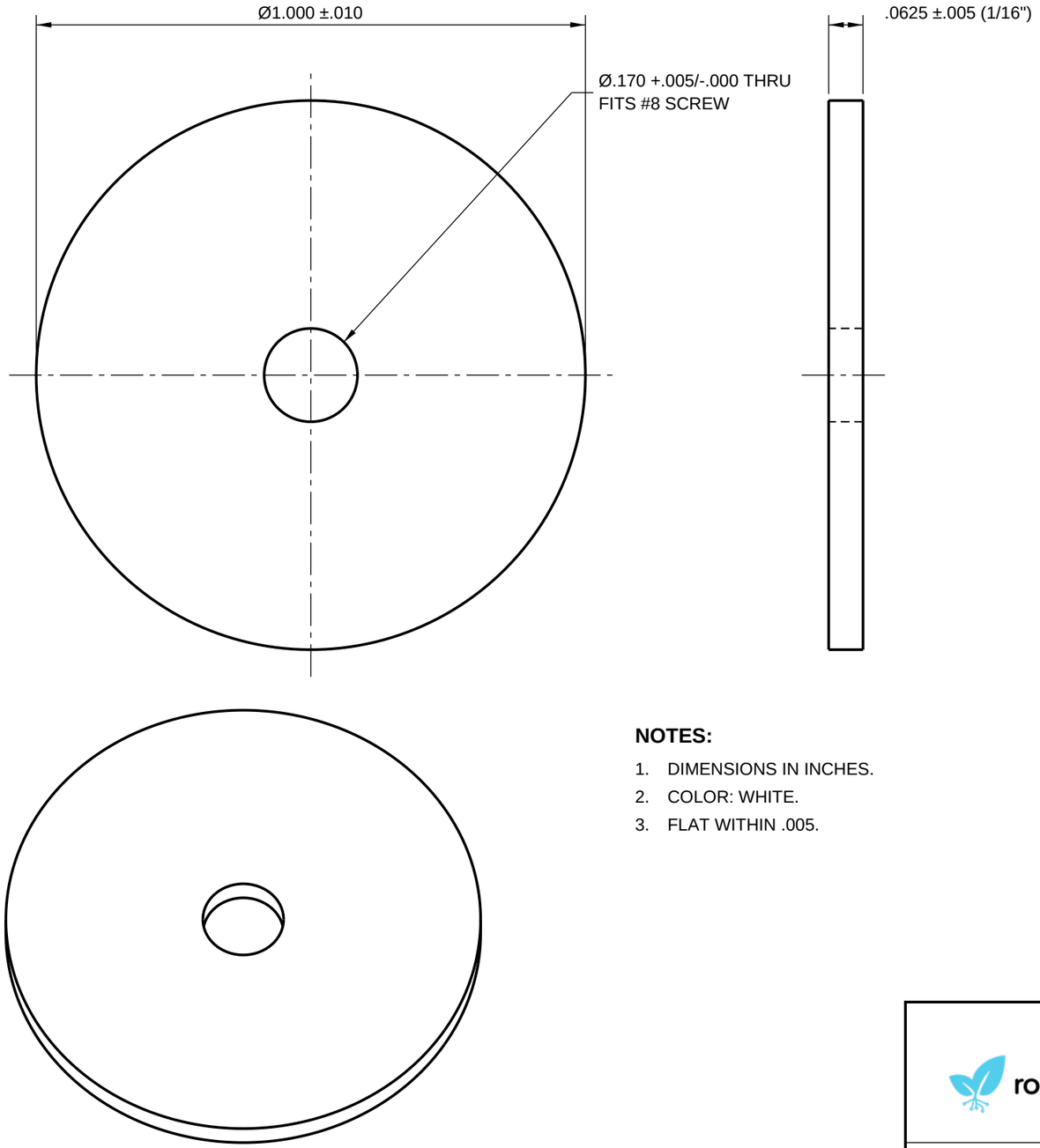

SPECIFICATIONS

FEATURE	INCH
OD	1.000 ±.010
ID	.170 +.005/-.000
THICKNESS	.0625 ±.005
SCREW	#8

MATERIALS

MATERIAL	WEIGHT EA
ACETAL (POM)	0.039 OZ
NYLON 6/6	0.031 OZ

NOTES:

1. DIMENSIONS IN INCHES.
2. COLOR: WHITE.
3. FLAT WITHIN .005.

robostem TECH

https://shop.robostem.org

© RoboSTEM Foundation 2026

UNLESS OTHERWISE SPECIFIED
.XX ±.01 .XXX ±.005
ANGLES ±1°

TITLE
FENDER WASHER
#8 x 1" OD x 1/16"

MATERIAL	FINISH	PART NO.	REV
ACETAL / NYLON 6/6	WHITE	**RS-H-005**	A

SCALE	WEIGHT	DATE	SHEET
4:1	0.039 OZ	2026-11-14	1 OF 1

SIZE	UNITS	3D MODEL	PROJECTION
A3	INCH	RS-H-005.step	